Thermostatic valve angle corner type left

Item number 2923123401



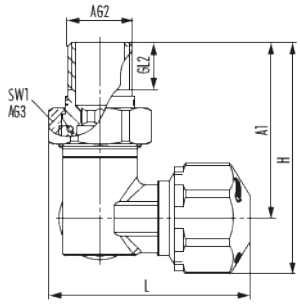

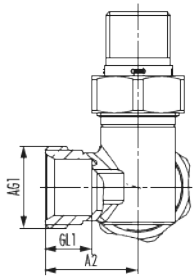

Technical data

Connection size 1 (AG1)	G 3/4
Connection size 2 (AG2)	G 1/2
Connection size 3 (AG3)	G 3/4
Connection type 1 (AT1)	Euro cone
Connection type 2 (AT2)	External thread
A1	56.7 mm
Length (L)	53.5 mm
Width (B)	46.5 mm
Height (H)	73.2 mm
Thread Length 1 (GL1)	7.5 mm
Thread Length 2 (GL2)	15 mm
Wrench size 1 (SW1)	30 mm
Suitable for	Euro cone , Thermostatic heads with connection thread M30 x 1.5
Mounting form	Angle-corner-type , Left connection
Pipe system	Two pipe system
Kvs-value	1.1

Thermostatic valve angle corner type left

Item number 2923123401

Material	Nickel-plated brass
Material moulded seal	EPDM
Material union nut	Nickel-plated brass
Material body/union nut	Nickel-plated brass
Max. operating pressure	10 bar
Max. operating temperature heating	90 °C
Thermostat connection	M30 x 1.5

Commercial data

Packaging Unit	50
EAN code	4033878205648
Weight	0.265 kg
ETIM 7	EC010136
ETIM 8	EC010136
ETIM 9	EC010136
eCl@ss 10.1	22-39-04-07
Customs tariff number	84818031

Note:

Thermostatic valve angle corner type left

Item number 2923123401