Contact insert M16 - 15-pole (solder in)

Item number 7001985127

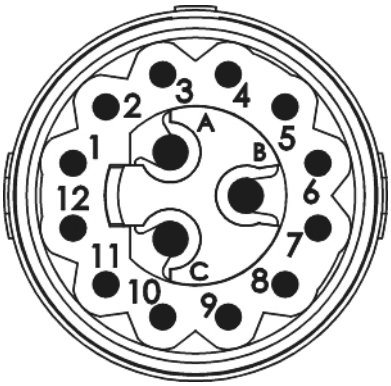

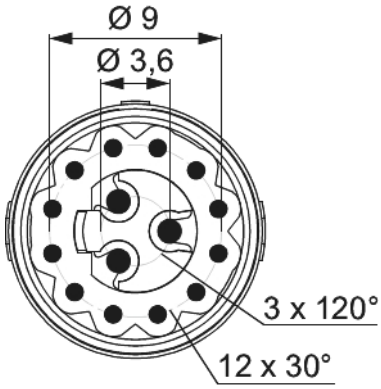

Technical data

Characteristic of connection	PCB assembly
Number of poles	15
Pole picture	12 + 3
Dip solder contacts length	10 mm
Insert	Pin
Material insulating body	PA 6 , PBT
Number of contacts signal	12
Number of contacts power	3
Contact-Ø signal	0.8 mm
Contact-Ø power	1.25 mm
Nominal current signal	3 A
Nominal current power	10 A
Nominal voltage at degree of pollution 3 signal	24 V~
Nominal voltage at degree of pollution 3 power	60 V~

Contact insert M16 - 15-pole (solder in)

Item number 7001985127

Test voltage signal	400 V~
Test voltage power	840 V~
Insulation resistance signal	> 10^8
Insulation resistance power	> 10^8
max. contact resistance signal	3 mOhm
Temperature range	-40°C to +125°C
Degree of Protection	3
Flammability	V-0 (UL 94)

Contact insert M16 - 15-pole (solder in)

Item number 7001985127

Commercial data

Packaging Unit	25
EAN code	4033878500989
Weight	0.00366 kg
ETIM 7	EC003557
ETIM 8	EC003557
ETIM 9	EC003557
eCl@ss 10.1	27440223
Customs tariff number	85366930

Note: