Contact insert M16 - 18-pole (solder in)

Item number 7001988118

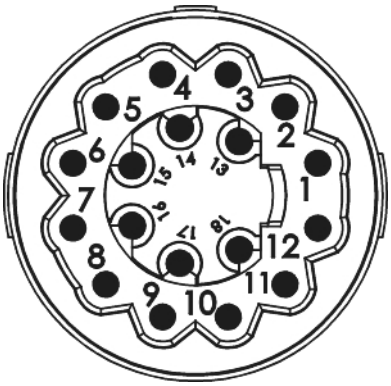

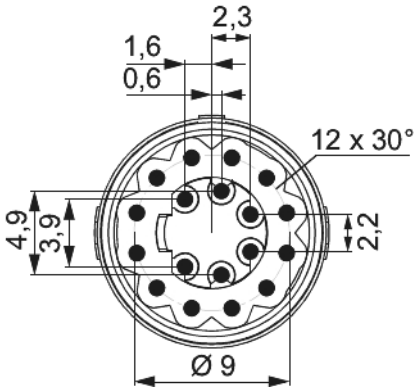

Technical data

Characteristic of connection	PCB assembly
Number of poles	18
Pole picture	12 + 6
Dip solder contacts length	17 mm
Insert	Socket
Material insulating body	PA 6 , PBT
Number of contacts signal	18
Contact-Ø signal	0.8 mm
Nominal current signal	3 A
Nominal voltage at degree of pollution 3 signal	24 V~
Test voltage signal	400 V~
Insulation resistance signal	> 10^8
max. contact resistance signal	3 mOhm
Temperature range	-40°C to +125°C
Degree of Protection	3

Contact insert M16 - 18-pole (solder in)

Item number 7001988118

Flammability	V-0 (UL 94)

Contact insert M16 - 18-pole (solder in)

Item number 7001988118

Commercial data

Packaging Unit	25
EAN code	4033878501016
Weight	0.00366 kg
ETIM 7	EC003557
ETIM 8	EC003557
ETIM 9	EC003557
eCl@ss 10.1	27440223
Customs tariff number	85366930

Note: