Contact M27 Signal crimp socket 1 mm

Item number 7010971022

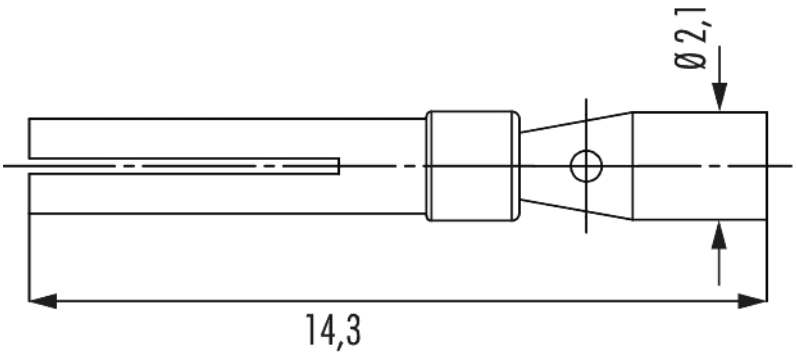

Technical data

Characteristic of connection	Crimp
Insert	Socket
Crimp contact	Crimp socket signal 1 mm slotted
Material contact	Copper-zinc alloy
Material contact surface	nickel, gold plated (0.25 µm)
Contact-Ø signal	1 mm
Length (L)	14.3 mm
Crimp range	0.5 – 1 mm²
Suitable crimping tool	7000900901 , 7000900904

Contact M27 Signal crimp socket 1 mm

Item number 7010971022

Commercial data

Packaging Unit	100
EAN code	4033878002698
Weight	0.00021 kg
ETIM 7	EC000796
ETIM 8	EC000796
ETIM 9	EC000796
Customs tariff number	85366990

Note: