Contact insert M16 - 7-pole

Item number 7053961101

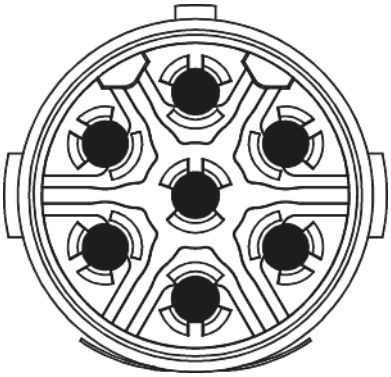

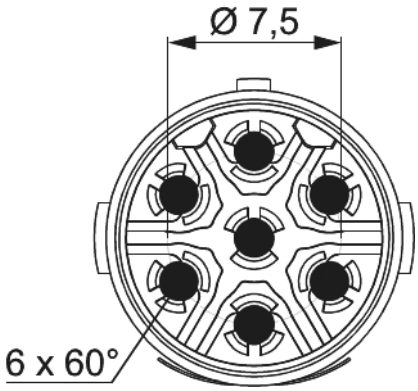

Technical data

Characteristic of connection	Crimp
Number of poles	7
Pole picture	6 + PE
Coding	PE
Insert	Pin
Color contact insert	DESINA orange
Material insulating body	PA 6 , PBT
Number of contacts power	6
Number of contacts PE	1
Contact-Ø signal	1.25 mm
Nominal current signal	16 A
Nominal voltage at degree of pollution 3 power	500 V~
Test voltage signal	1500 V~
Insulation resistance power	> 10^8
max. contact resistance signal	3 mOhm

Contact insert M16 - 7-pole

Item number 7053961101

Temperature range	-40°C to +125°C
Degree of Protection	3
Flammability	V-0 (UL 94)
Suitable power contacts	7010981211
Suitable PE-/FE-contacts	7010981211

Contact insert M16 - 7-pole

Item number 7053961101

Commercial data

Packaging Unit	25
EAN code	4033878502730
Weight	0.00175 kg
ETIM 7	EC003557
ETIM 8	EC003557
ETIM 9	EC003557
eCl@ss 10.1	27440223
Customs tariff number	85472000

Note: