Housing right angle coupler connector M12 Power - S, T

Item number A712-7S31500000

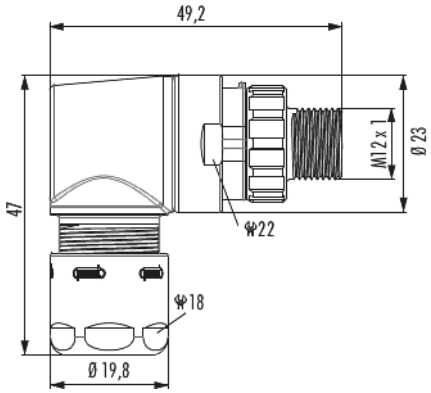

Technical data

Material housing	brass , Zinc Die Cast
Material housing surface	Nickel
Coding	S , T
Version	Screw
External thread plug-in side	M12 x 1
Knurled screw-Ø plug-in side	19.7 mm
Locking type	Screw
Shield	shielded
Material seals/o-rings	HNBR , NBR
Wrench size (SW1/SW2)	17/18 mm
Cable diameter	8 – 11 mm
Temperature range	-40°C to +125°C
Protection class	IP 67 , IP 69 K
suitable contact inserts	A712-7S05931105 , A712-7T05904105

Housing right angle coupler connector M12 Power - S, T

Item number A712-7S31500000

Commercial data

Packaging Unit	5
EAN code	4033878011157
Weight	0.07267 kg
ETIM 7	EC003556
ETIM 8	EC003556
ETIM 9	EC003556
eCl@ss 10.1	27440224
Customs tariff number	85366990

Note: