Assembly Instructions

Right Angle Panel Connector

1.

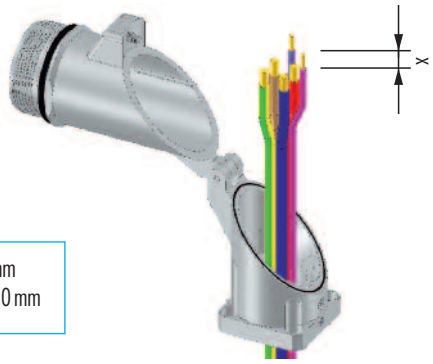

x	Contact 2 mm = 7 mm Contact 3,6 mm = 10 mm

2.

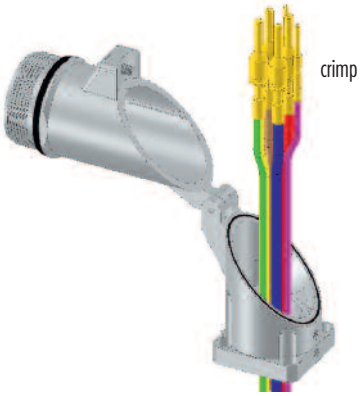

3.

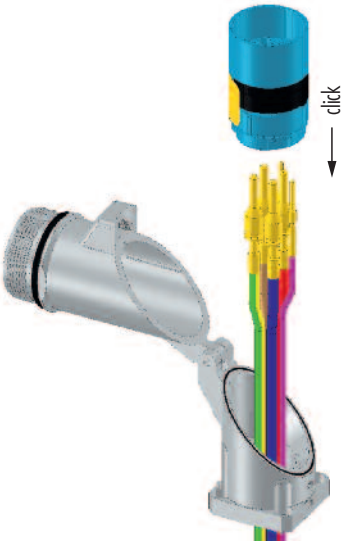

4.

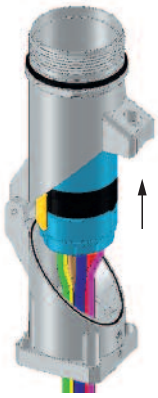

5.

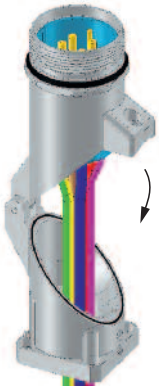

6.

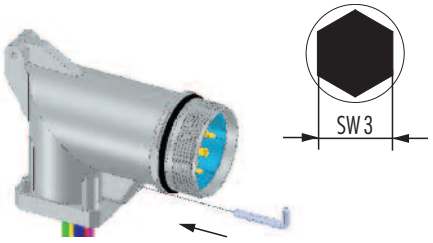
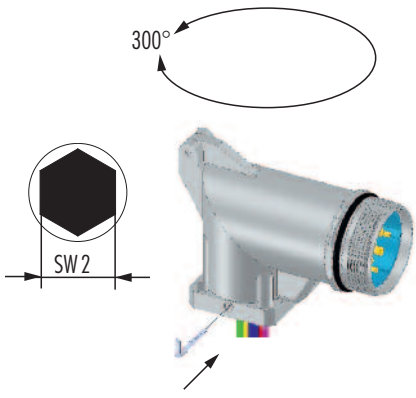
7.